BA 3.8 - DGRL/MRL

HP 300

Example illustrations, not all possible type variants are shown!

Original Assembly Instructions

with operating instructions and technical appendix

in accordance with EU Machinery Directive (MD) 2006/42/EC
in accordance with EU Pressure Equipment Directive 97/23/EC

Language version: English

Revision: 02-06-15

EBRO ARMATUREN®

Contents

Page

Additional information and up-to-date addresses for our offices and trading partners can be found here:

www.ebro-armaturen.com

EBRO ARMATUREN GmbH
Karlstraße 8
D-58135 Hagen
☎ +49 (0) 2331 904-0
Fax +49 (0) 2331 904-111

A) Introduction

These instructions are intended to assist the user of the EBRO butterfly valves of the HP 300 series when installing, operating and maintaining valves.

Caution	Ignoring the following cautions and warnings could result in danger and the manufacturer's warranty may become void. If you have any questions, please contact the manufacturer - see page 2.

A1 Intended use

Butterfly valves of the **HP 300 series** are intended solely to shut off, permit or control the flow of media within the permitted limits of pressure and temperature after fitting between the flanges of a piping system.

These valves correspond to the requirements of EN593, if they are supplied with materials in accordance with EN593 and the requirements of ASME B16.34 and API 609, if they are supplied with materials in accordance with ASTM.

The permissible pressure and temperature ranges are described in the planning documents EBRO ARMATUREN type sheets <3.8>.

These valves must be fitted between piping flanges

- in accordance with EN1092-1, PN 40 or PN63 with sealing faces according to form B
- in accordance with ANSI B16.5 or EN1759-1, class 300 or class 600 with sealing faces RF

that are machined plane-parallel and must be in alignment.

Flange gaskets in accordance with EN1514-2 or ANSI B16.20 are recommended.

Section A2-2 < Safety instructions for the operator> must be observed when using the valve.

Caution	If a valve is used in continuous operation for controlling, operating conditions should be chosen so as to avoid high speeds from differential pressure. Cavitation must not be permitted under any circumstances.

A2 Safety instructions

A2-1 General safety instructions

The same safety instructions apply for valves as for the piping system into which they are fitted and as for the control system to which the actuator is connected. These instructions only provide safety information which is to be observed in addition to the valve's own guidelines.

The design of the valve is "blow-off-proof" in accordance with the definitions of EN593 and API 609.

There might be additional safety instructions for drive assemblies in the associated instructions.

A2-2 Safety instructions for the operator

The manufacturer cannot be held liable if the valve is not used as intended. Therefore, when using the valve, you must ensure that:

⇒ it is only used as intended and described in section A1;

Danger to life	A valve must not be operated if its permissible pressure/temperature range is not sufficient for the operating conditions: This permissible range is described in the EBRO ARMATUREN type sheets <3.8> – see page 2 <Information>. **Ignoring these regulations may lead to danger to life and limb and the pipe system may get damaged.**
Danger to life	It must be ensured that the selected material grades of the valve parts coming into contact with the medium are suitable for the used media. The manufacturer cannot be held liable for damage caused by corrosion of aggressive media. **Ignoring these regulations may lead to danger to life and limb and the pipe system may get damaged.**

⇒ a drive unit, which was subsequently fitted to the valve, is adapted to the valve and correctly adjusted in both end positions of the valve - in particular the closed position;

⇒ the piping system was professionally laid and is checked regularly. The wall thickness of the valve's housing is dimensioned so that the additional piping system forces and torques that are common in such professionally laid cables have been considered;

⇒ the valve is connected properly to these systems;

⇒ the actuation time of the valve/actuator unit is adapted to the requirements of the piping system;

⇒ the usual flow rates in this pipe system are not exceeded in continuous operation and abnormal operating conditions like vibrations, water hammers, erosion (e.g. caused by wet steam), cavitation and small proportions of solids in the medium - particularly abrasive ones - are clarified with the manufacturer;

⇒ valves that are operated at temperatures >50°C or <-20°C are protected against touching together with the piping system connections;

⇒ only personnel who are qualified for pressurised piping operate and maintain the valve.

A2-3 Special risks

Danger to life	The valve shaft is sealed with a gland. Before the nuts on the gland are loosened or removed, the **pressure in the piping system must be completely reduced,** so that medium cannot escape from the gland.
Danger to life	Before undoing a screw plug (or cover) from the housing or before deinstalling the valve from the piping system, the **pressure in the piping system on either side of the valve must be reduced to zero** so that the medium does not leak out of the piping in an uncontrolled manner**.**
Danger	*For valves that are used as end valves:* During normal operation, in particular for gaseous, hot and/or dangerous media, **a blank flange must be attached to the free connection end**, or the valve must be tightly sealed in "CLOSED" position.
Danger	If a valve is to be opened as end valve in a pressurised piping, this must be done with utmost care, so that **the medium spurting out** does not cause any damage. Caution when closing the end valve: Note risk of crushing between butterfly disc and housing!

Danger	If a valve needs to be removed from a piping system, medium can escape from the piping or the valve. In case of harmful or dangerous media, the piping must be completely emptied before the valve is removed. Take care with **residues that may continue to flow.**

A2-4 Labelling on the butterfly valve

Each butterfly valve is labelled with the following data on its housing or type plate:

For	Labelling	Remarks
Manufacturer	**EBRO ARMATUREN**	Address see Section 8 <Information>
Valve type	e.g.: **HP 314**	(labelling on housing) see EBRO catalogue pages <3.8>
Conformity	**CE (if PED applicable)**	Conformity with the Pressure Equipment Directive 97/23/EC
Code	**0036 (if PED applicable)**	"Notified Body" according to EU Directive = TÜV Süddeutschl.
Ident. No.	e.g. **123456/012/001**	
DN	**DN (and numerical value)**	(labelling on housing) e.g. DN 80
Year of manufacture	MM/YY	
PN	e.g. **PN 40**	PN is the required nominal pressure rating of the flange connection
Temp. limits	**TS (and numerical value)**	Numerical values for upper and lower operating limits
Max. perm. pressure	**PS (and numerical value)**	Numerical value in bar (at room temperature)
Material	e.g.: **GS-C25** *or* **A216 WCB**	(labelling on housing) Housing material
	e.g.: **1.4408** *or* **A351 CF8M**	(on type plate) Butterfly disc material
	e.g.: **1.4122** *or* **431**	(on type plate) Shaft material
	e.g.: **1.4542** *or* **630**	(on type plate) Material of replaceable seat ring

The type plate should not be covered so that the installed valve remains identifiable.

Identification on the housing and the type plate must stay intact so that the valve remains identifiable.

B) Transport and storage

Valves must be handled, transported and stored with care:

- ⇒ The valve is to be transported and stored in its protective packaging until it is installed.
- ⇒ Attach lifting accessories (ropes, belts) only to the housing of the butterfly valve, not to the actuator: see example in figure below.

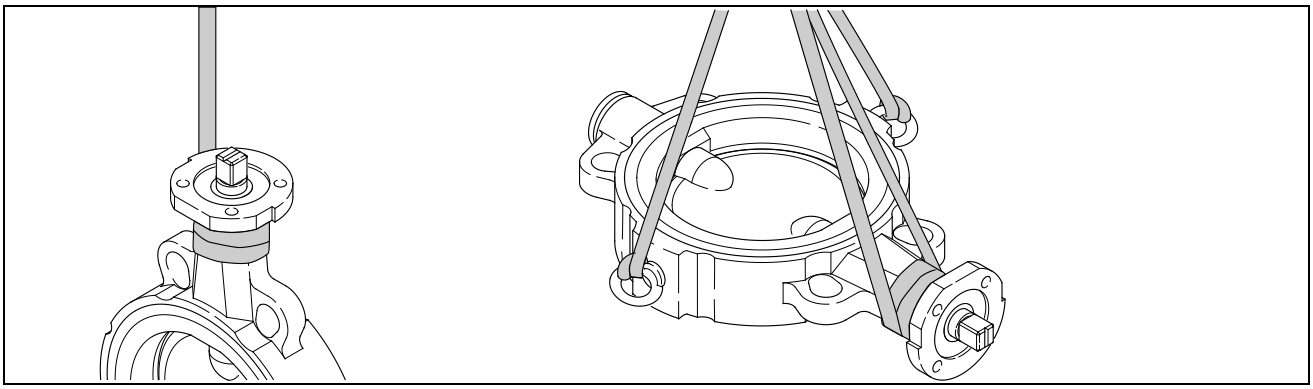

Figure 1: Transport with crane rope

- ⇒ If the valve is kept in storage before it is installed, it needs to be stored in a closed room, protected from harmful influences like dirt or humidity.
- ⇒ The valve sealing surfaces in particular must not be damaged during transport and storage. **Do not stack valves!**
- ⇒ Valves are delivered in closed position and must be stored like that. The actuator must not be actuated.

Danger	*Valves that are delivered without an actuator:* The butterfly disc is not secured against movement. It must not be opened from its closed position by external influences (e.g. vibration).
Caution	*Only valves with pneumatic actuator "spring-opening":* The butterfly disc protrudes over both sides of the housing in delivery state. The packaging on the protruding edge is to protect the butterfly disc against damage. The micro-finished sealing surface on the disc edge must not be damaged.

C) Installation in the piping

C1 General

When installing valves in a pipe, the same instructions apply as for the connection of pipes and similar piping systems. The following additional instructions apply for valves. For transport to the installation site, section B (above) also needs to be observed.

Danger

There is a risk of crushing for non-installed butterfly valves:
The actuator must only be connected and actuated when the butterfly valve is connected to the pipe. If the valve is intended as end valve in a pipe section, either a cover plate must be attached to the outlet or the actuator must be secured against unauthorised actuation to eliminate the risk of crushing.

Caution

The actuator is adjusted for the operating data given in the order:
The actuator design is dimensioned ex work as shown in table 1 and must not be modified without approval by the manufacturer.

	M_D erf. [Nm] Δp	M_D erf. [Nm] Δp	M_D erf. [Nm] Δp	M_D erf. [Nm] Δp
	25 bar	40 bar	50 bar	63 bar
DN 080	85	125	150	175
DN 100	130	190	230	275
DN 150	300	430	515	620
DN 200	525	765	915	1100
DN 250	820	1200	1430	1720
DN 300	1180	1720	2060	2480
DN 350	1610	2340	2800	3370
DN 400	2100	3060	3660	4400
DN 450	2700	3900	4600	
DN 500	3300	4800	5700	
DN 600	4700	6900	8200	

Table 1 Drive torque

Note	*Closing/opening times for pneumatic/hydraulic piston actuators:* The supply and disposal of the control medium is to be adapted to the valve in such a way that – if no other specification is to be observed – the closing time t of the butterfly valve does not drop below the guideline value: t [sec] = DN [mm] / 25.
Danger to life	If – in exceptional cases – a valve must be installed without an actuator, it must be ensured that no pressure is applied to such a valve. If a drive unit is retrofitted, the torque for the closed position, direction of rotation, angle of actuation and the "OPEN" setting of the end stops of the valve must be adapted. **Ignoring these regulations may lead to danger to life and limb and the pipe system may get damaged.**
Caution	*Only for butterfly valves with electric actuator:* It must be ensured that the actuator is switched off in the **end position** "**CLOSED**" **by the signal of the torque switch**. *Further information can be found in the instructions of the electric actuator.* The shut off in **end position** "**OPEN**" must be performed by the limit switch.

C2 Preparation for installation

⇒ Make sure that only butterfly valves are installed whose pressure class, connection type and dimensions correspond to the operating conditions. See labelling on the valve.

Danger to life	A valve must not be installed if its permissible pressure/temperature range is not sufficient for the operating conditions: This permissible range is marked on the valve; the permissible range of application ("rating"), depending on the seat material (see type plate), is described in the EBRO type sheet <3.8>. **Ignoring these regulations may lead to danger to life and limb and the pipe system may get damaged.** In case of doubt, please consult the manufacturer EBRO ARMATUREN.

⇒ Check the valve and actuator for transport damage. Damaged valves and actuators must not be fitted.

⇒ The counterflanges of the pipe must be identical to the PN of the valve, they must be in alignment and be plane-parallel.

Danger	The width of the opening in the counterflange must allow sufficient space for the butterfly disc in its open position so that is not damaged when opened. See table 1.

DN	50	65	80	100	125	150	200	250	300	350	400	450	500	600
Ø D_i	51	51	80	103	124	151	196	245	296	334	385	438	484	560

Table 1 : Minimum required inner diameter D_i of the counterflanges

⇒ Before installation, any contaminations, in particular hard foreign particles, must be carefully removed from the valve and the connecting pipe sections.

C3 Installation steps

Caution	The valve must be fitted in the gap between the piping flanges with the butterfly disc closed: otherwise, the butterfly disc might be damaged and the valve could become leaky.
Danger to life	*Only butterfly valves with pneumatic actuator "spring-opening":* For installation, - the actuator must be removed in the open position; - then the butterfly disc must be closed manually; - then the valve must be fitted in the pipe; - then the butterfly disc must be opened manually - and then the actuator must be fitted again. **Ignoring these regulations may lead to danger to life and limb and the pipe system may get damaged.**

⇒ *Butterfly valves of the HP 300 series can be installed generally irrespective of the direction of flow. But in order to take advantage of the optimal functioning of the butterfly valve:*
It is recommended installing the valve so that the **direction of the arrow marked** on the housing matches the direction of the **pressure being applied to a closed disc.** This direction could be against the direction of flow with the butterfly valve open!

⇒ The preferred installation position is that with horizontal butterfly shaft. The actuator is - if possible - not to be positioned directly below the valve: gland leakage might damage the actuator.

⇒ When installing the valve in an already mounted pipe, the distance between the pipe ends must be measured so that the flange seal and all flange sealing faces remains undamaged.
However, this distance must not be larger than necessary, so that no additional stresses are generated in the pipe when the flange connection is tightened.

⇒ The butterfly valve is to be carefully centred during installation using the flange bolts.

Note	Butterfly valves with short installation length require some screws of different length for connection with the counterflanges. Dimensions for the flange bolts can be found in the EBRO company standard sheet EW 1827.

⇒ For the connection of the drive unit to the controller, follow the instructions provided.

Caution	Drives that were mounted subsequently must be supported when they cause an unplanned bending stress due to their size and installation position on the mounting set between the valve and actuator.

⇒ To complete the installation, a functional test must be performed with the signals of the controller: The valve must properly close and open in accordance with the control commands. Evident malfunctions must be rectified before commissioning. Also see section 7 <Troubleshooting>.

Danger	The specifications for switch off in the end positions **in accordance with the caution in C1** must be observed before starting the functional test. Incorrectly executed commands could **be dangerous and/or cause damage to the butterfly valve**.

D) Pressure testing the pipe section

Pressure testing of the valves was already performed by the manufacturer. For pressure testing a pipe section with installed valves the following is to be observed:

- ⇒ Newly installed piping must be thoroughly rinsed first to flush out all foreign bodies.
- ⇒ **Valve open:** The testing pressure must not exceed **the value 1.5 x (PN or PS)** (according to the type plate). *(PS = maximum permissible operating pressure)*
- ⇒ **Valve closed:** The testing pressure must not exceed **the value 1.1 x (PN or PS)** (according to the type plate).

If a valve is leaking, refer to section F <Troubleshooting>.

E) Normal operation and maintenance

The valves are to be operated with the signals of the controller. Valves delivered ex works with actuator are precisely adjusted and should not be changed so long as the valve operates faultlessly.

Danger to life	The pressure and temperature limits for operation of the valve are specified on the type plate; the permissible range of application ("rating"), depending on the seat material (see type plate), is described in the EBRO type sheet <3.8> **Exceeding these operating limits may lead to danger to life and limb and the pipe system may get damaged.**

For the manual override on the actuator (if available), normal manual forces are sufficient. Usage of extensions to increase the actuator force is not permitted.

Regular maintenance is not required for this valve. When checking the pipe section, there must be no exterior leakage on a valve. If this is this case, refer to section F <Malfunctions>.

We recommend operating valves which permanently remain in the same position 3 to 4 times a year.

Danger	*A butterfly valve is not self-locking:* The actuator must not be dismounted **as long as pressure is applied to the butterfly valve.**
Danger	*A piston actuator is not self-locking:* Piston actuators require **a permanent supply of control pressure** for all positions that are moved into under control pressure - this applies in particular to the (sealed) closed position.

F) Troubleshooting

During troubleshooting, section 2 <Safety instructions> must be observed at all times.

Danger	*If a valve must be removed from pipes containing dangerous media and removed from the system:* The parts of the valve that have been in contact with the media must be professionally decontaminated before repair.

Type of problem	Countermeasure	Note
Leakage on a connection with the pipe flange or the seal on the housing cover	Re-tighten the screw connection. *If the leakage cannot be removed with this:* Repair required: Replace flange seal. Observe notes in section A2.3 <Special risks> and request seal for housing cover and required instructions from EBRO ARMATUREN.	***Note 1:*** *Spare parts are to be ordered with all information on the type plate. Only EBRO original parts must be installed.* ***Note 2:*** *If it is determined after removal that the parts that come into contact with the product are not sufficiently resistant to the medium, choose parts made of a suitable material.*
Leak in seat sealing	Check whether the valve is 100% closed. *If the valve is in closed position:* Check whether the actuator closes with full torque. *If the actuator closes with full torque:* Repeatedly open and close the valve under pressure. *If the valve is still leaking after this:* Increase the torque of the actuator according to table 1 in section C1 in position "CLOSED" to max. 1.25 x nominal torque.	
Operating fault	Check drive unit and control commands. *If actuator and controller are OK:* Remove the valve (refer to the information in section A2-3 <Special risks>) and inspect. *If the valve is damaged:* Repair required: Request spare parts and required instructions from EBRO ARMATUREN.	***Note 2:*** *EBRO ARMATUREN also performs such service on request, also on site.*

Type of problem	Countermeasure	Note
Leakage on the gland	Re-tighten both nuts on the gland alternately and in small increments of ¼ rotation each in clockwise direction. *If the leak cannot be remedied in this way:* Repair required: Request spare parts and required instructions from EBRO ARMATUREN. *If the nuts on the gland are to be loosened or removed (anti-clockwise):* **Danger to life** To protect the operating personnel against hazards, make sure that the piping on both sides of the valve has been completely depressurised. Refer to section A2-3 <Special risks>.	
If a pneumatic actuator with spring is to be dismounted	**Caution: Risk of injury** Before removing the actuator from the valve, the connection to the control pressure must be separated.	

In case of malfunctions on the drive unit, refer to corresponding instructions.

In the event that a repair is required, please contact our Service Department:

Email: service@ebro-armaturen.com

G) Recommended seal for the counterflanges of the pipe section:

Spiral gasket in accordance with EN 1514-2 Form C2

Properties	Reliable low- to high-pressure seal High level of stability High compressibility Very good rebound behaviour Compensates changes of length and force
Temperature range	-200/+500° C
Materials Spiral	1.4404
	Feed conveyor flexible graphite (FG)
	Inner ring 1.4404
	Outer ring steel, powder-coated
Surface pressure	50-300 N/mm2 at +20°C 60-220 N/mm2 at +300°C For optimum sealing, the spiral should be pressed together approx. 25-30%

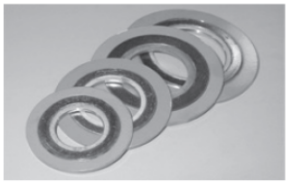

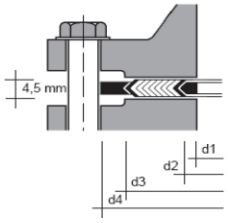

STYLE CG & CGI* TO ASME B16.20

TO SUIT ASME B16.5 FLANGES

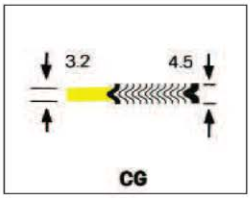

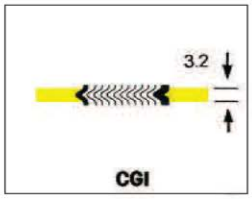

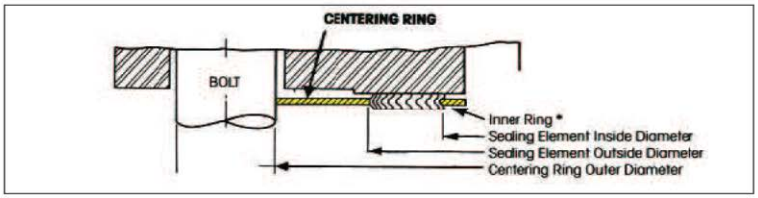

NOM PIPE SIZE	OUTSIDE DIAMETER OF SEALING ELEMENT		INNER DIAMETER OF SEALING ELEMENT							OUTER DIAMETER OF CENTERING RING						
	CLASS 150, 300, 400, 600	CLASS 900, 1500, 2500	CLASS 150	CLASS 300	CLASS 400	CLASS 600	CLASS 900	CLASS 1500	CLASS 2500	CLASS 150	CLASS 300	CLASS 400	CLASS 600	CLASS 900	CLASS 1500	CLASS 2500
1/4	22.2	-	12.7	12.7	12.7	12.7	-	-	-	44.5	44.5	44.5	44.5	-	-	-
1/2	31.8	31.8	19.1	19.1	19.1	19.1	19.1	19.1	19.1	47.8	54.1	54.1	54.1	63.5	63.5	69.9
3/4	39.6	39.6	25.4	25.4	25.4	25.4	25.4	25.4	25.4	57.2	66.8	66.8	66.8	69.9	69.9	76.2
1	47.8	47.8	31.8	31.8	31.8	31.8	31.8	31.8	31.8	66.8	73.2	73.2	73.2	79.5	79.5	85.9
1 1/4	60.5	60.5	47.8	47.8	47.8	47.8	39.6	39.6	39.6	76.2	82.6	82.6	82.6	88.9	88.9	104.9
1 1/2	69.9	69.9	54.1	54.1	54.1	54.1	47.8	47.8	47.8	85.9	95.3	95.3	95.3	98.6	98.6	117.6
2	85.9	85.9	69.9	69.9	69.9	69.9	58.7	58.7	58.7	104.9	111.3	111.3	111.3	143.0	143.0	146.1
2 1/2	98.6	98.6	82.6	82.6	82.6	82.6	69.9	69.9	69.9	124.0	130.3	130.3	130.3	165.1	165.1	168.4
3	120.7	120.7	101.6	101.6	101.6	101.6	95.3	92.2	92.2	136.7	149.4	149.4	149.4	168.4	174.8	196.9
3 1/2	133.4	133.4	114.3	114.3	104.8	104.8	104.8	104.8	-	161.9	165.1	161.9	161.9	190.5	187.3	-
4	149.4	149.4	127.0	127.0	120.7	120.7	120.7	117.6	117.6	174.8	181.1	177.8	193.8	206.5	209.6	235.0
4 1/2	165.1	165.1	139.7	139.7	134.9	134.9	134.9	134.9	-	177.8	196.9	193.7	209.6	238.1	231.8	-
5	177.8	177.8	155.7	155.7	147.6	147.6	147.6	143.0	143.0	196.9	215.9	212.9	241.3	247.7	254.0	279.4
6	209.6	209.6	182.6	182.6	174.8	174.8	174.8	171.5	171.5	222.3	251.0	247.7	266.7	289.1	282.7	317.5
8	263.7	257.3	233.4	233.4	225.6	225.6	222.3	215.9	215.9	279.4	308.1	304.8.	320.8	358.9	352.6	387.4
10	317.5	311.2	287.3	287.3	274.6	274.6	276.4	266.7	270.0	339.9	362.0	358.9	400.1	435.1	435.1	476.3
12	374.7	368.3	339.9	339.9	327.2	327.2	323.9	323.9	317.5	409.7	422.4	419.1	457.2	498.6	520.7	549.4
14	406.4	400.1	371.6	371.6	362.0	362.0	355.6	362.0	-	450.9	485.9	482.6	492.3	520.7	577.9	-
16	463.6	457.2	422.4	422.4	412.8	412.8	412.8	406.4	-	514.4	539.8	536.7	565.2	574.8	641.4	-
18	527.1	520.7	474.7	474.7	469.9	469.9	463.6	463.6	-	549.4	596.9	593.9	612.9	638.3	704.9	-
20	577.9	571.5	525.5	525.5	520.7	520.7	520.7	514.4	-	606.6	654.1	647.7	682.8	698.5	755.7	-
24	685.8	679.5	628.7	628.7	628.7	628.7	628.7	616.0	-	717.6	774.7	768.4	790.7	838.2	901.7	-

DIMENSIONS IN MILLIMETERS.

Declaration on EU Directives

The manufacturer

EBRO ARMATUREN

Gebr. Bröer GmbH
Karlstrasse 8
58135 Hagen
Germany

declares that the valves **EBRO butterfly valves of the HP300 series**

1. are pressure-bearing equipment in accordance with the EU Pressure Equipment Directive 97/23 EC and the requirements of this Directive and
2. must only be operated by observing the operating instructions <**BA 3.8>** and the instructions for the actuator.

Applied standards:

EN 593	**Valve design standard**
AD2000 rules and standards	**Regulations for pressurised housing parts**
EN 12266-1/-2	**Industrial valves** – **Pressure testing**… (final inspection before delivery)

Type description and technical features:

EBRO type sheets <3.8>

Applied conformity assessment procedures:

according to Annex III in line with Pressure Equipment Directive 97/23/EC

- **for Categories II and III Module H**

The EBRO order confirmation included with the delivery describes the category for which a delivered valve is suitable.

Name of the notified bodies:	*ID no. of the notified body*
TÜV Süddeutschland	**0036**

Mounting declaration in accordance with 2006/42/EC (MD)

The manufacturer **EBRO ARMATUREN Gebr. Bröer GmbH, D-58135 Hagen**

declares that the valves **EBRO butterfly valves of the HP 300 series**

- **with pneumatic, electric or hydraulic actuator**

3. are incomplete machines in accordance with the EU Machinery Directive 2006/42/EC, but meet applicable requirements of this Directive;
4. must only be operated by observing the operating instructions **BA 3.8** and the instructions for the actuator.
   Commissioning of these valves is only permitted once the valve is connected to the pipe and the risk of injury due to the moving disc is thus ruled out.
5. The table overleaf shows which requirements of the MD are met.
6. Further to a reasoned request, EBRO ARMATUREN shall grant national authorities insight into the special documents in accordance with the MD – the commercial property rights of the manufacturer remain unaffected by this.
   The employee responsible for these documents is Mr. Günter Kipp at EBRO.

Hagen, June 2015

Management

Applied standards:

EN 12100	**Safety of machines – general design guidelines**

The manufacturer EBRO ARMATUREN GmbH D-58135 Hagen declares that a butterfly valve HP 300 complies with the Machinery Directive 2006/42/EC (MD) as follows:	
Requirements according to Annex 1 of the MD:	
1.1.1, h) Intended use	See section A2 of the "Original Installation and Operating Instructions".
1.1.2., c)) Incorrect use warnings	See relevant sections of the "Original Installation/Operating Instructions".
1.1.2.,d) Required protective equipment	Exactly as for the system in which the valve is installed.
1.1.2., e) Accessories	No special tool is required for changing wearing parts
1.1.3 Components in contact with media	All materials in contact with the medium are specified in the order confirmation from EBRO ARMATUREN and on the type plate. The respective risk analysis is the responsibility of the user.
1.1.5 Handling	See "Original Installation and Operating Instructions".
1.2 and 6.2 Control system	Is the responsibility of the user – the actuator instructions are also to be observed.
1.3.2 Prevention of breakage risks	For valve parts retaining pressure: See manufacturer declaration on Directive 97/23 EC. For functional parts: Ensured in case of intended use of the valve
1.3.4 Sharp corners and edges	For exterior accessible parts: Requirement met in case of intended use of the butterfly valve.
1.3.7/.8 Risk of personal injury due to moving parts	Requirement met in case of intended use of the butterfly valve. Maintenance/repair work is not permitted if the piping is under pressure and/or the actuator is connected to the energy supply. If the valve is retrofitted with an actuator by the user: Actuator type, capacity and the interface must be approved by EBRO ARMATUREN.
1.5.1 – 1.5.3 Power supply	Is the responsibility of the user – the actuator instructions are to be observed.
1.5.5 Touching of hot / very cold surfaces	See warnings in the "Original Installation/Operating Instructions".
1.5.7 Explosion	Ex -Protection might be required and must be confirmed by EBRO ARMATUREN. The labelling on the butterfly valve and the "Original Installation and Operating Instructions" must be observed.
1.5.13 Emission of hazardous substances	Not applicable for harmless media flowing through the butterfly valve. In case of hazardous media, respective caution is required when maintaining the gland. Protective equipment for the personnel might be required.
1.7.3 Marking	Also see "Original Installation/Operating instructions" of the butterfly valve and respective actuator documentation
1.7.4 Operating instructions	Also see "Original Installation/Operating instructions" of the butterfly valve and respective actuator documentation

Requirements according to Annex II	See table above and the mounting declaration overleaf
Requirements according to Annex III	No labelling of the valve as complete machine
Requirements according to Annex VI	Also see "Original Installation/Operating instructions" of the butterfly valve and respective actuator documentation
Requirements according to Annex VII	Only section B applies
Requirements in accordance with Annex IV, V,VIII-XII	Not relevant